ETT304-1, ETT365-2, MET304 and METB365-1

dacor
The Life of the Kitchen.®

30 Inch and 36 Inch Wide, Millennia® Electric Cooktops

PLANNING GUIDE

Product tolerances: ±1/16” (±1.6 mm) unless otherwise noted

⚠ WARNING

- Observe all governing codes and ordinances during planning and installation. Contact your local building department for further information.
- This appliance must be installed in accordance with the accompanying installation instructions.

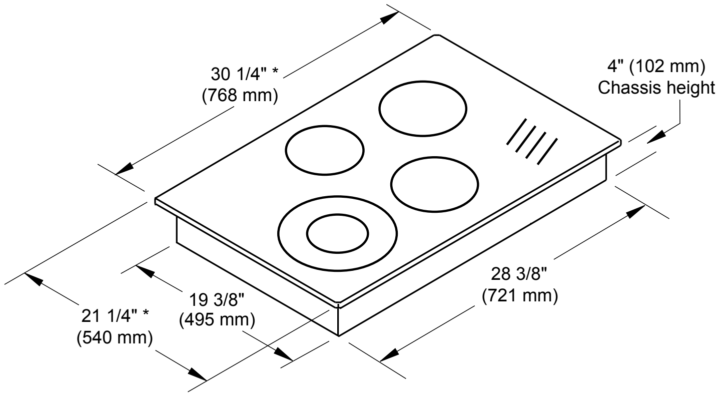

PRODUCT DIMENSIONS - ETT304-1 AND MET304 (ETT304-1 SHOWN)

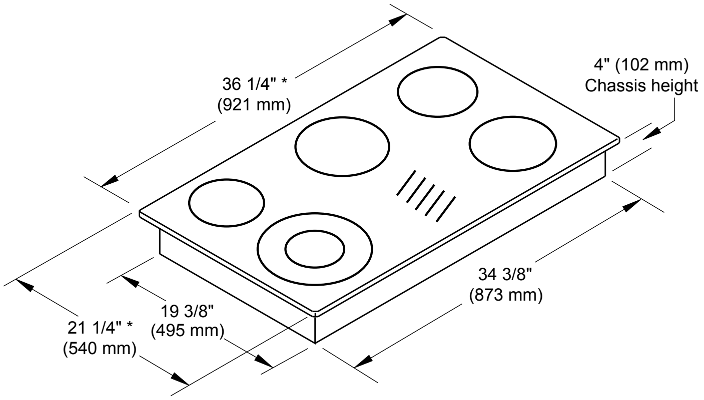

PRODUCT DIMENSIONS - ETT365-2 AND METB365-1 (ETT365-2 SHOWN)

*** For units with stainless steel trim, other units may be up to 1/8" less.**

Model No.	Electrical Circuit Required	Total Connected Load*	Minimum Supply Wire Size Line and Ground Connections
ETT304-1	240 Vac, 60 Hz, 40 Amps.	6.9 kW (29 Amps.)	No. 8 AWG
ETT365-2	240 Vac, 60 Hz, 40 Amps.	9.1 kW (38 Amps.)	
MET304	240 Vac, 60 Hz, 40 Amps.	6.9 kW (29 Amps.)	
METB365-1	240 Vac, 60 Hz, 50 Amps.*	9.6 kW (40 Amps.)	

* For reference only, See the product data label on bottom of unit for exact specifications.

ELECTRICAL SUPPLY REQUIREMENTS

NOTES:

1. **The cooktop is supplied with a flexible, 48 inch long power conduit consisting of two (2) insulated hot lead conductors (L1 and L2) and one (1) insulated ground conductor. There is no neutral connection. All leads are copper. The conduit is connected to the right corner of the cooktop. Do not connect the ground wire to neutral.**
2. **Tested in accordance with the latest edition of ANSI Z21.1 and U.L. 858 Standard for household cooking appliances.**
3. **These cooktops are not approved for recessed installation.**

Family Owned
American Made

dacor The Life of the Kitchen.®

30 Inch and 36 Inch Wide, Millennia® Electric Cooktops

PLANNING GUIDE

All tolerances: +1/16”, -0, (+1.6 mm, -0) unless otherwise stated

Allow a minimum of 6 inches (152 mm) clearance between the top of the countertop and any combustible surface below, including the upper edge of a drawer below the cooktop. Proper under-cabinet clearance is also required for the cooktop hold down brackets.

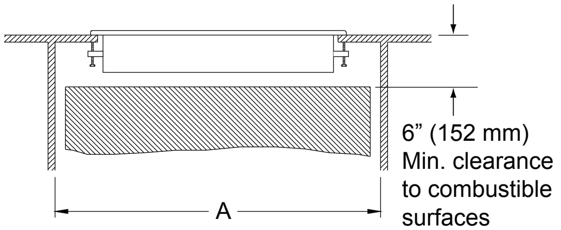

Model	(A) Minimum Under Counter Clearance (Width)
ETT304-1, MET304	30 1/2” (775 mm)
ETT365-2, METB365-1	36 1/2” (927 mm)

UNDER COUNTER CLEARANCE

When installing model ETT365-2 or METB365-1 and the bottom of the chassis is to be enclosed wall to wall, you must install Dacor ventilation duct kit ATD323.

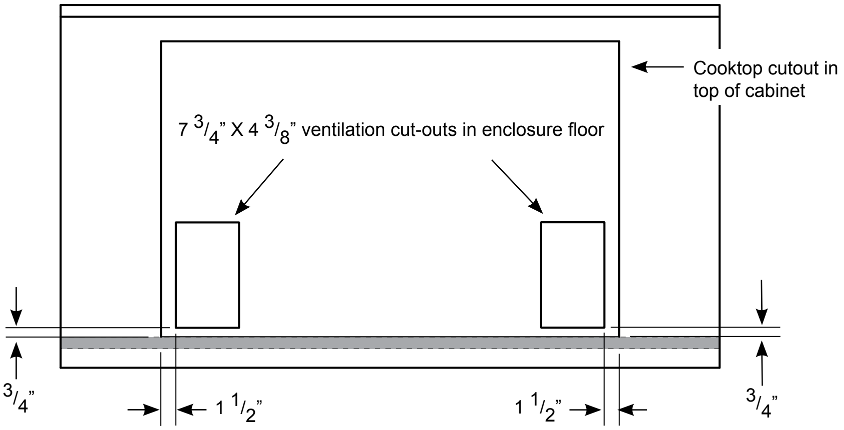

TOP VIEW VENTILATION CUTOUT

Model	(B) Minimum Under Counter Clearance (Width)
ETT304-1, MET304	28 3/4” (730 mm)
ETT365-2, METB365-1	34 3/4” (883 mm)

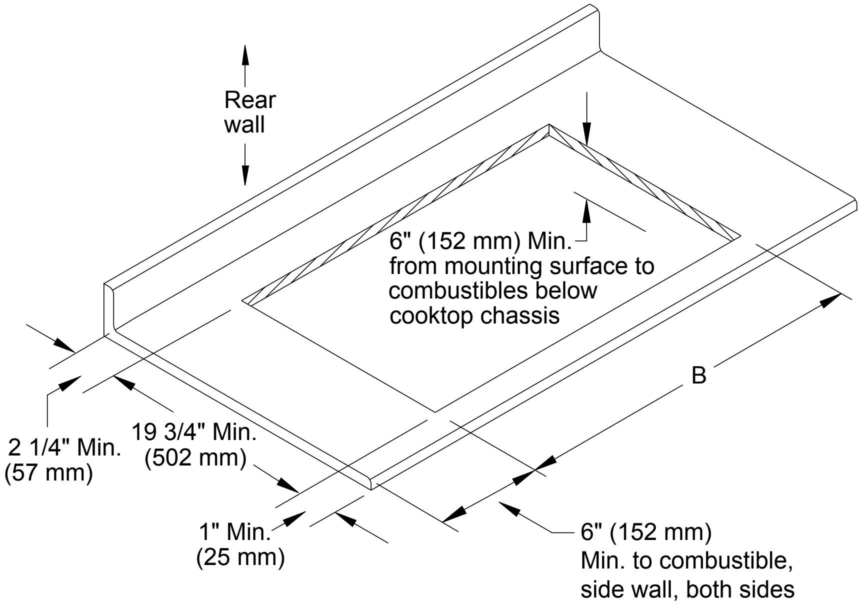

COUNTERTOP CUTOUT (WITHOUT RAISED VENT)

dacor The Life of the Kitchen.®

30 Inch and 36 Inch Wide, Millennia® Electric Cooktops

PLANNING GUIDE

All tolerances: +1/16”, -0, (+1.6 mm, -0) unless otherwise stated

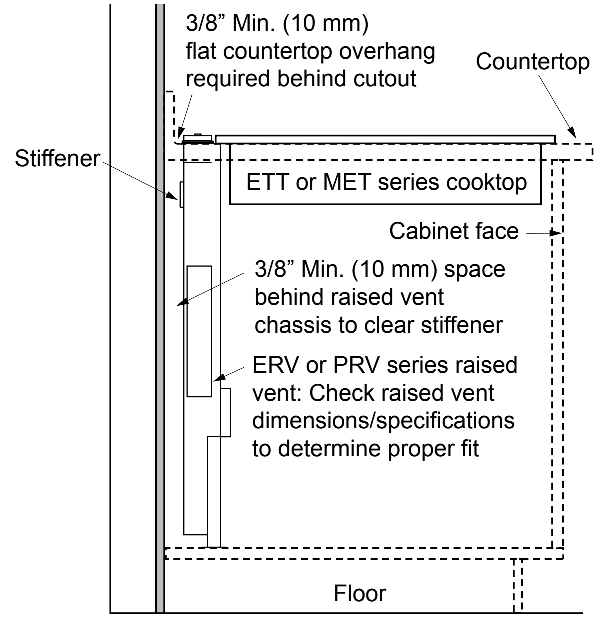

ERV AND PRV SERIES RAISED VENT INSTALLATION SIDE VIEW

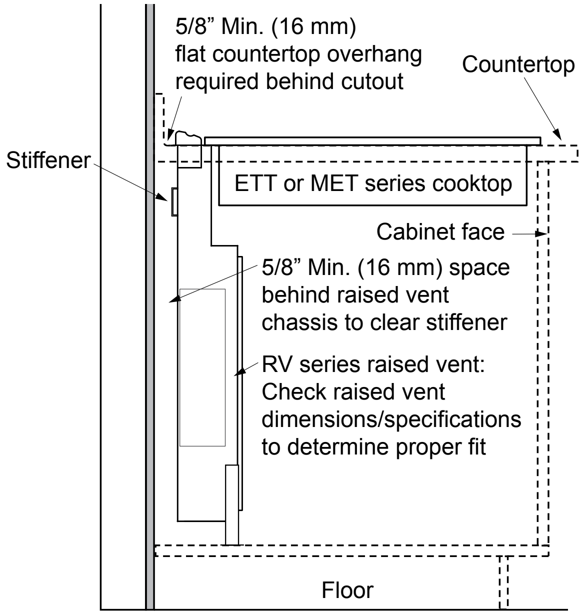

RV SERIES RAISED VENT INSTALLATION SIDE VIEW

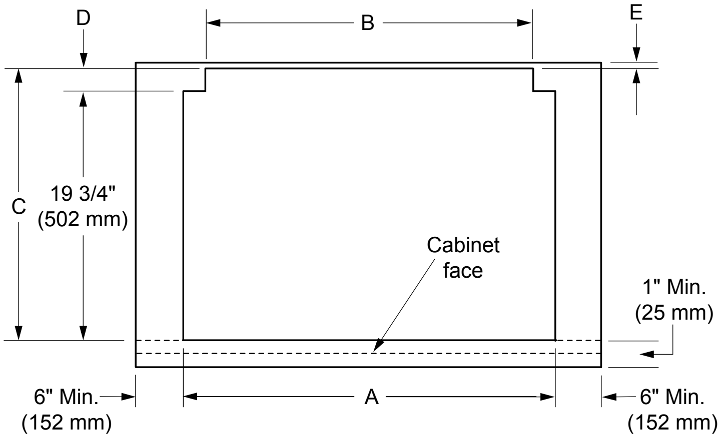

COUNTERTOP CUTOUT (WITH RAISED VENT) TOP VIEW

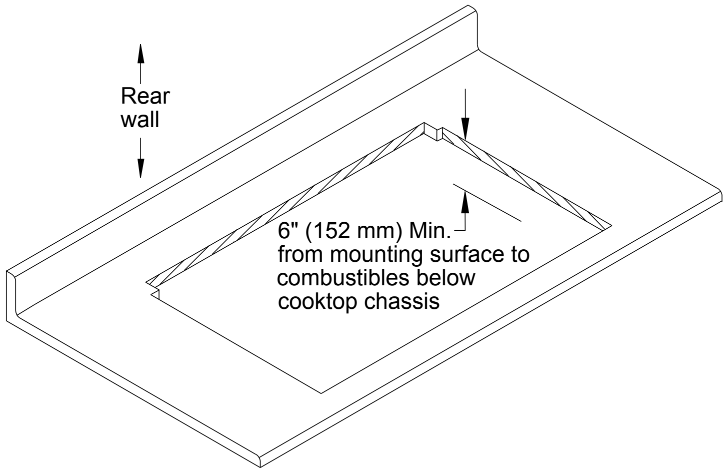

COUNTERTOP CUTOUT (WITH RAISED VENT) ISO VIEW

Model/Configuration	(A) Cooktop Cutout Width	(B) Raised Vent Cutout Width	(C) Total Cutout Depth	(D) Raised Vent Cutout Depth	(E) Minimum Rear Countertop Overhang
ETT304-1 or MET304 cooktop with ERV30 or PRV30 raised vent	28 3/4” (730 mm)	27 3/4” (705 mm)	22 1/2” (572 mm)	2 3/4” (70 mm)	3/8” (10 mm)
ETT304-1 or MET304 cooktop with RV30 raised vent			22 1/4” (565 mm)	2 1/2” (64 mm)	5/8” (16 mm)
ETT365-2 or METB365-1 cooktop with ERV36 or PRV36 raised vent	34 3/4” (883 mm)	33 3/4” (857 mm)	22 1/2” (572 mm))	2 3/4” (70 mm)	3/8” (10 mm)
ETT365-2 or METB365-1 cooktop with RV36 raised vent			22 1/4” (565 mm)	2 1/2” (64 mm)	5/8” (16 mm)